powerline

Cable Carrying and Festoon System

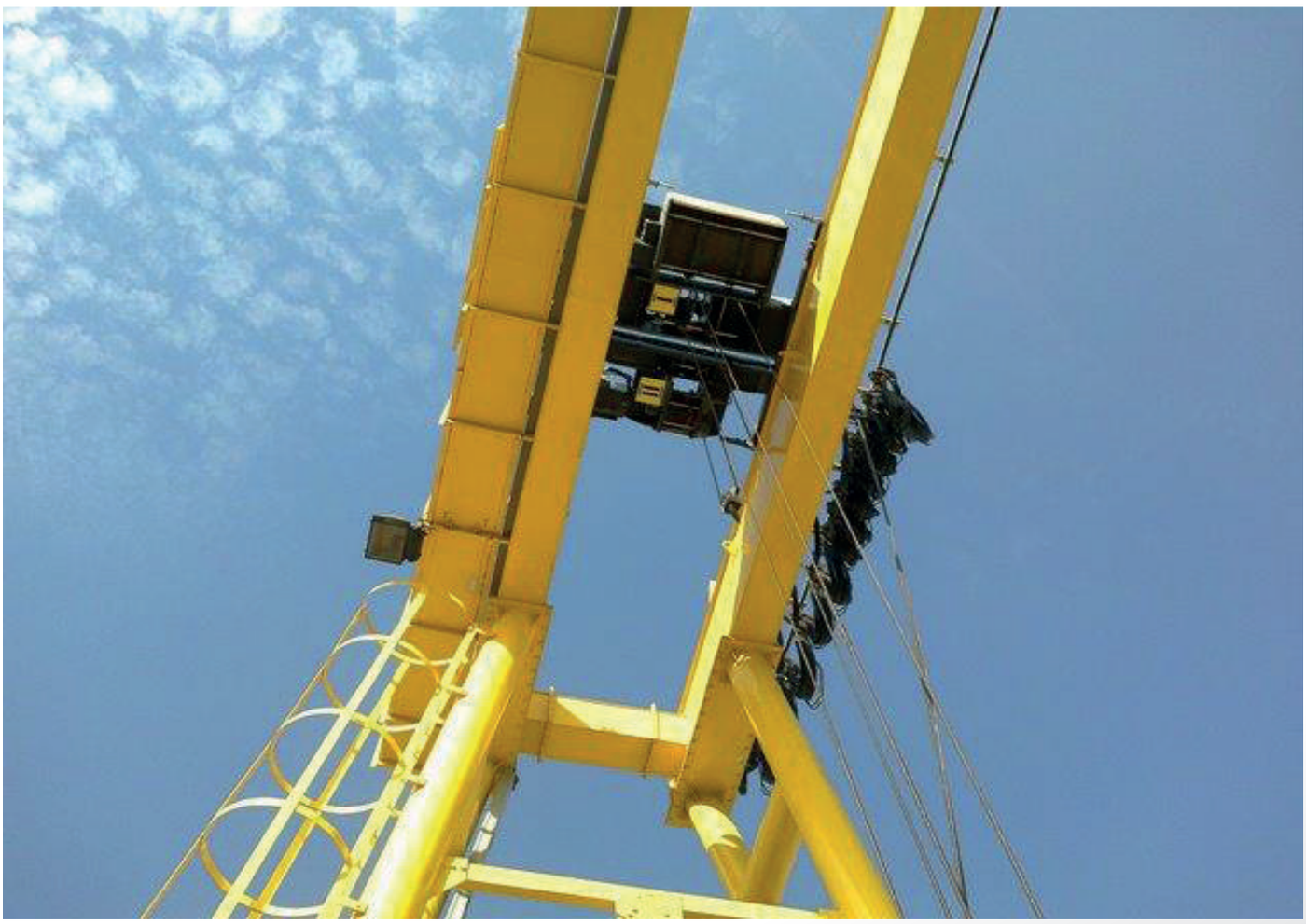

- Cable Trolley For Round Cable Application
- Cable Trolley For Flat Cable Application
- Material: Plastic, Galv.Steel, Stainless Steel
- C-Rail Festoon System # Size 30x32
- C-Rail Festoon System # Size 40x40
- Easy Quality and Economy System

A. Design

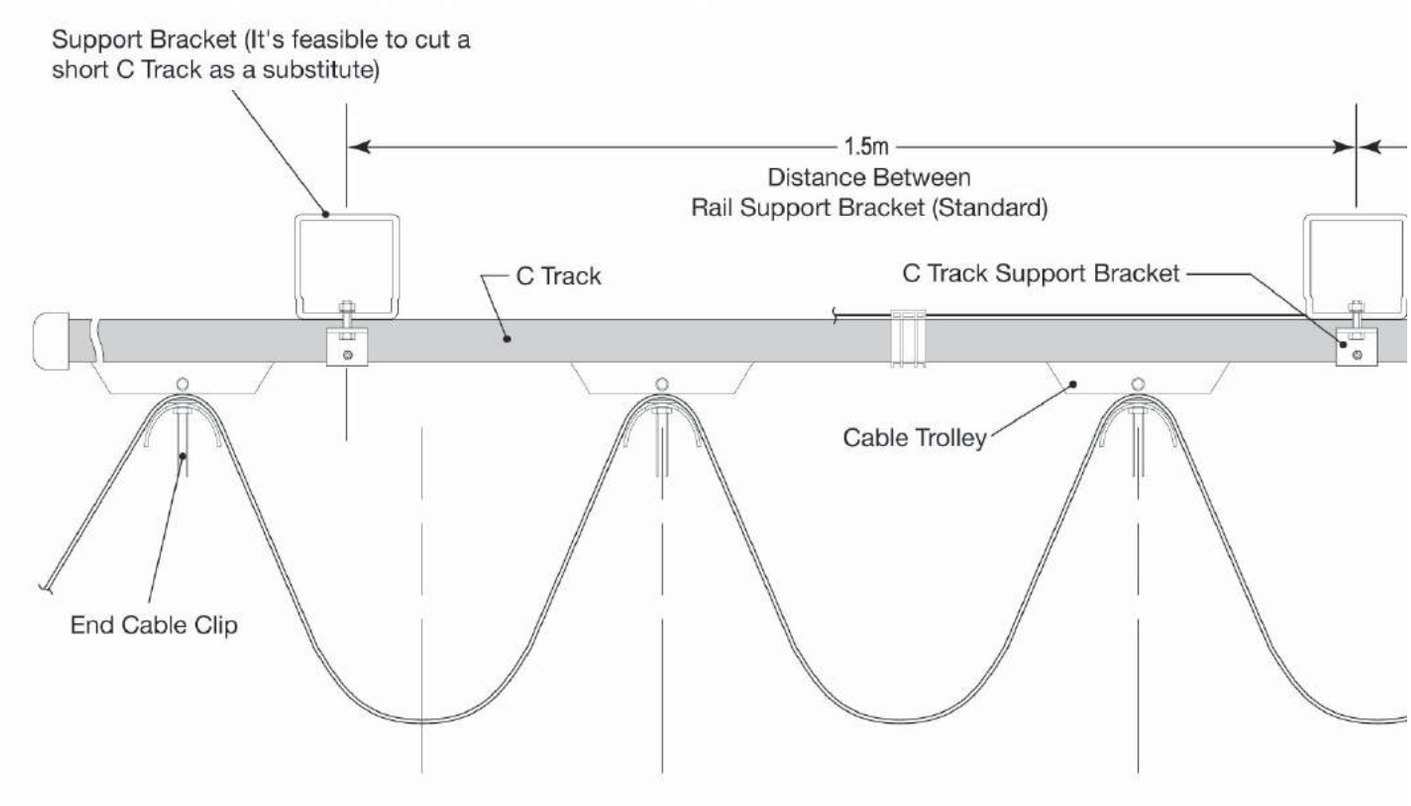

B. Structure Data

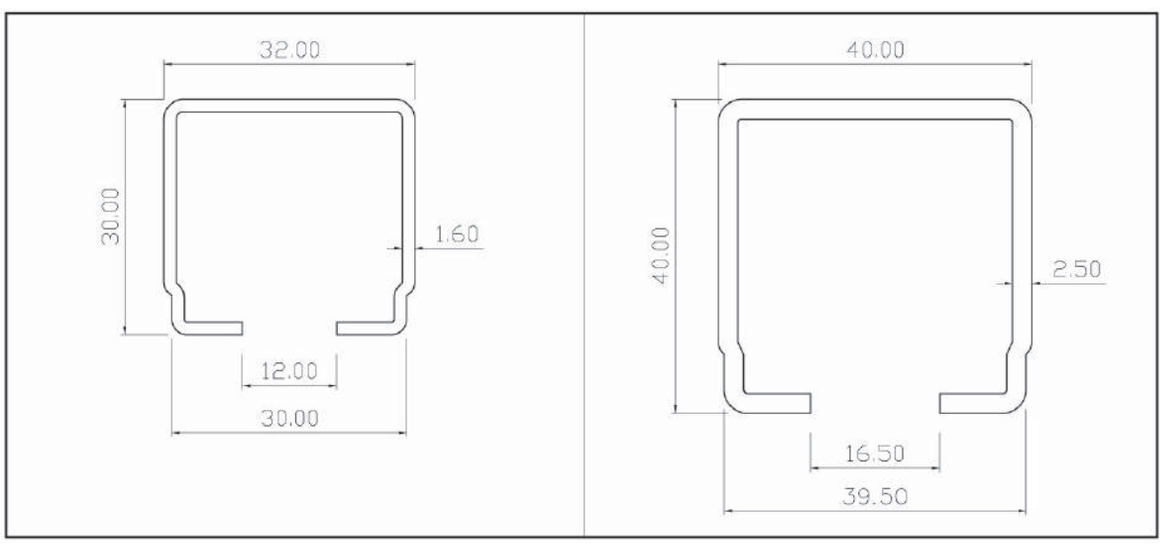

C30 C-rail Cross Section Chart

C40 C-rail Cross Section Chart

Part Code	Weight x Height	Material	Specification
PWL-3-001(4M)	30x32mm	Galv.Steel	Length 4 Metres
PWL-3-001(6M)	30x32mm	Galv.Steel	Length 6 Metres
PWL-3-018(4M)	30x32mm	Stainless Steel	Length 4 Metres
PWL-3-012(3M)	40x40mm	Galv.Steel	Length 3 Metres
PWL-3-024(3M)	40x40mm	Stainless Steel	Length 3 Metres

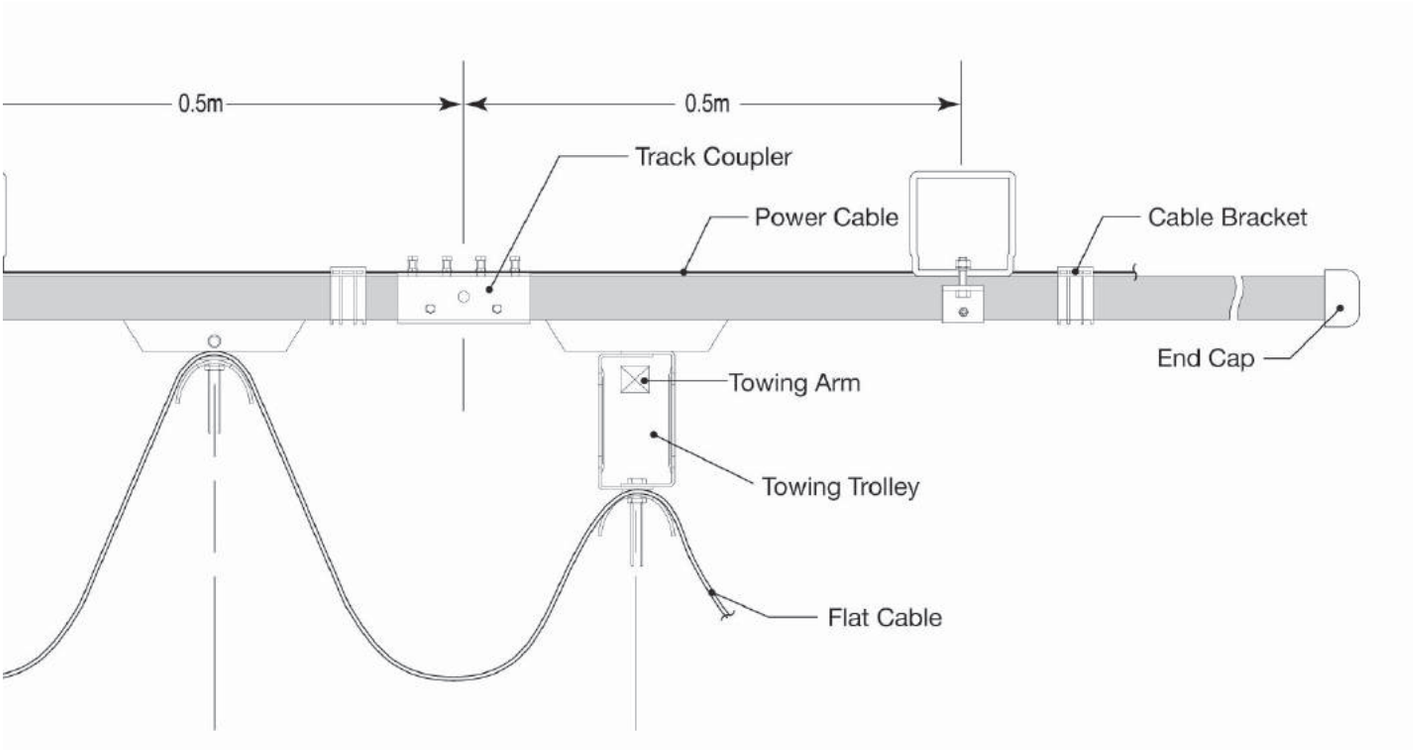

C. Layout

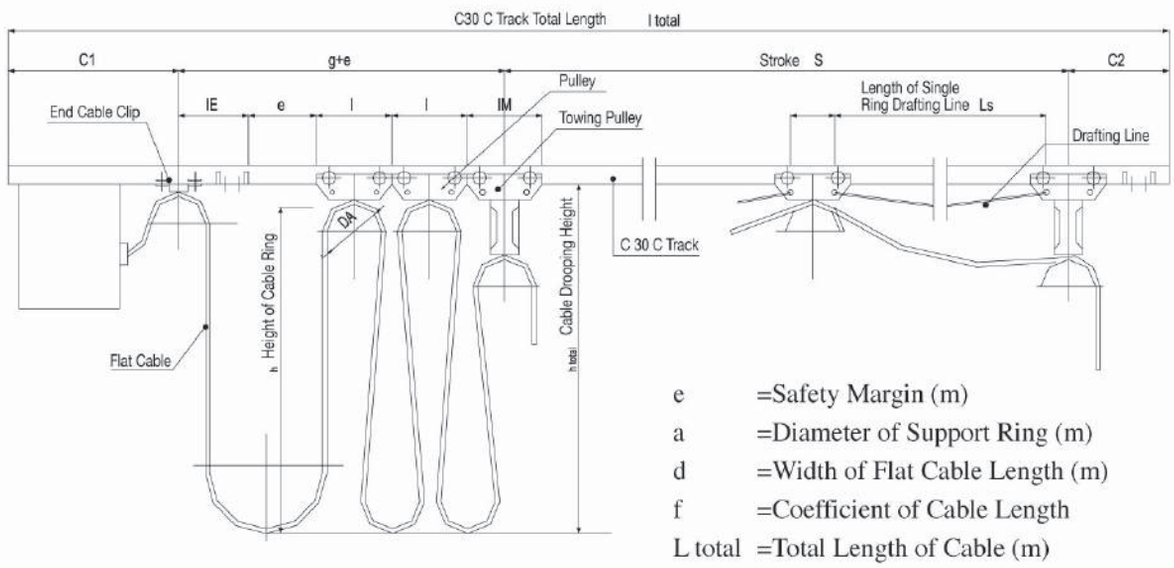

e =Safety Margin (m)
a =Diameter of Support Ring (m)
d =Width of Flat Cable Length (m)
f =Coefficient of Cable Length
L total =Total Length of Cable (m)
L loop =Length of Single Ring Cable (m)
Ls =Length of the Single Ring Drafting Line (m)

I total = Total Length of C30 or C40 Track
s =L Stroke (m)
h = Height of Cable Ring (m)
h Total = Cable Drooping Height (m)
n =Quantity of Cable Ring
g =Length Needed of Pulley and Its Accessories (m)
l =Length of Pulley (m)

$$n=f\times\frac{s+g}{2h} \qquad h=f\times\frac{s+g}{2n}$$

f=1.1 (Sliding Speed 50m/min)

SECTION 1 : Cable Trolley for Round Cable Application

Plastic Carrier + Plastic Body (Small Size)		
Part Code	**Material**	**Application**
PWL-1-001	Plastic	Round Rope

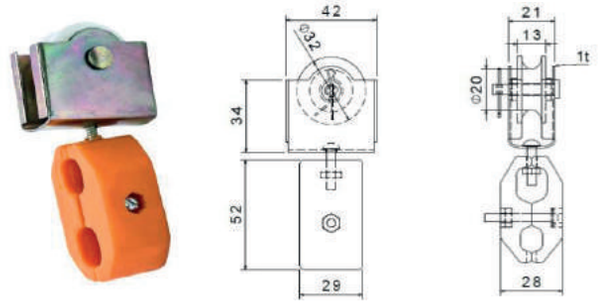

Plastic Carrier + Plastic Body (Large Size)		
Part Code	**Material**	**Application**
PWL-1-002	Plastic	Round Rope

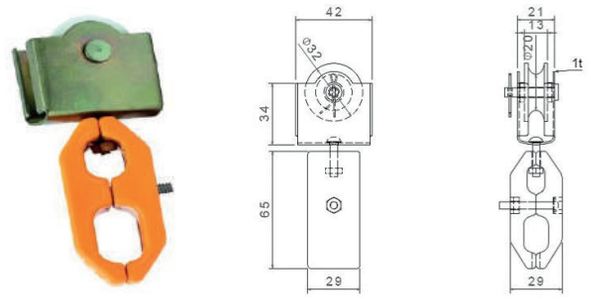

Steel Carrier + Plastic Body (Small Size)		
Part Code	**Material**	**Application**
PWL-1-003	Steel+Plastic	Round Rope

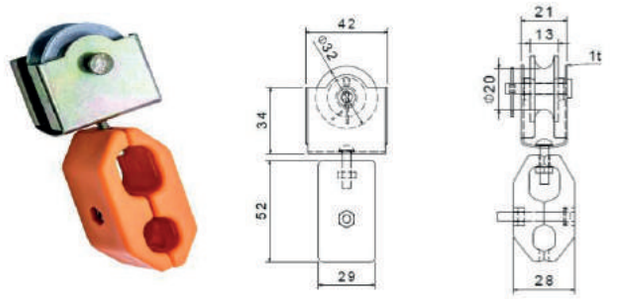

Steel Carrier + Plastic Body (Large Size)		
Part Code	**Material**	**Application**
PWL-1-004	Steel+Plastic	Round Rope

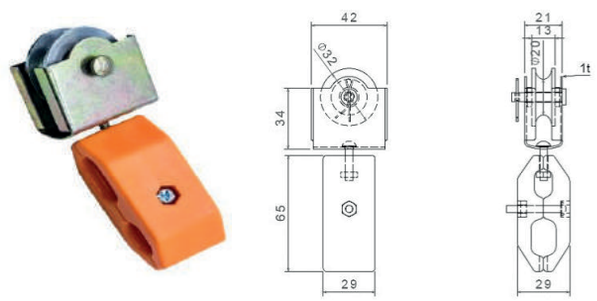

Steel Trolley + Plastic Body (Small Size)		
Part Code	**Material**	**Application**
PWL-1-005	Steel+Plastic	C-Rail

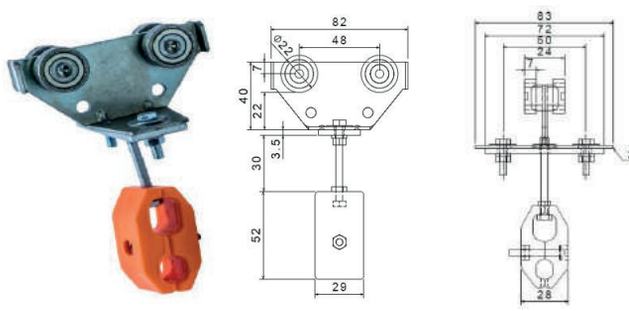

Steel Trolley + Plastic Body (Large Size)		
Part Code	**Material**	**Application**
PWL-1-006	Steel+Plastic	C-Rail

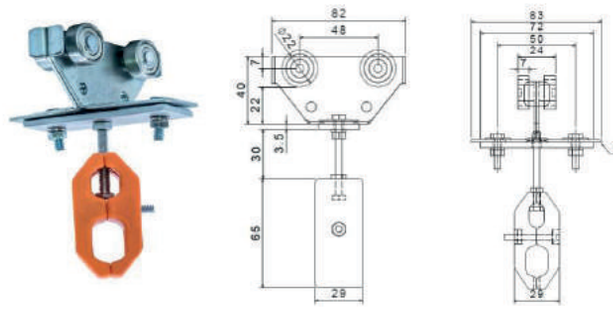

Steel Trolley + Plastic Support (Small Size)		
Part Code	**Material**	**Application**
PWL-1-007	Steel+Plastic	C-Rail

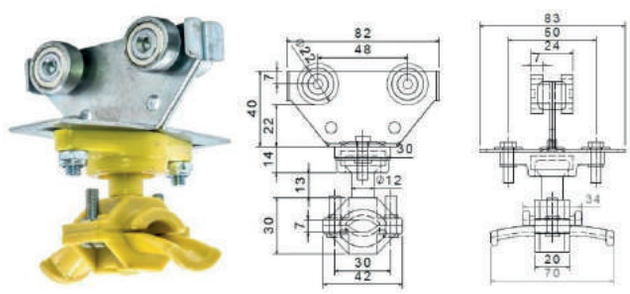

Steel Trolley + Plastic Support (Large Size)		
Part Code	**Material**	**Application**
PWL-1-008	Steel+Plastic	C-Rail

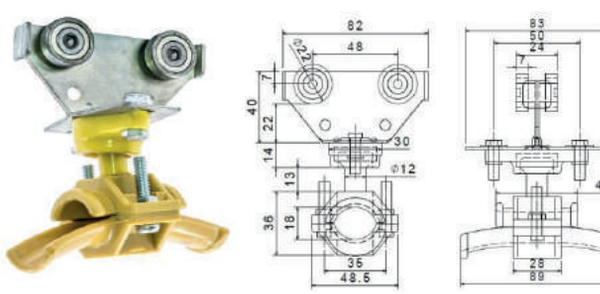

SECTION 1 : Cable Trolley for Round Cable Application

Plastic Trolley + Plastic Support (Small Size)		
Part Code	**Material**	**Application**
PWL-1-009	Plastic	C-Rail

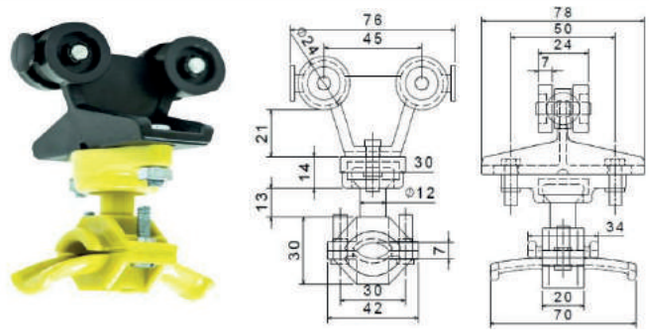

Plastic Trolley + Plastic Support (Large Size)		
Part Code	**Material**	**Application**
PWL-1-010	Plastic	C-Rail

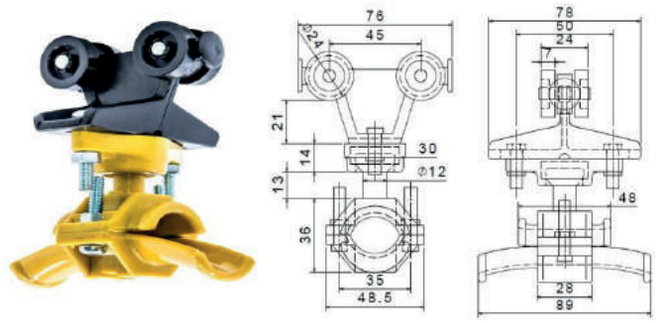

I-Beam Plastic Trolley (Small Size)		
Part Code	**Material**	**Application**
PWL-1-011	Plastic	Beam 75-100mm
		Wire Ø 9-20mm

I-Beam Plastic Trolley (Large Size)		
Part Code	**Material**	**Application**
PWL-1-012	Plastic	Beam 125-150mm
		Wire Ø 9-20mm

I-Beam Steel Trolley (Straight Line)		
Part Code	**Material**	**Application**
PWL-1-013	Steel	Beam 75-150mm
		Wire Ø 10mm

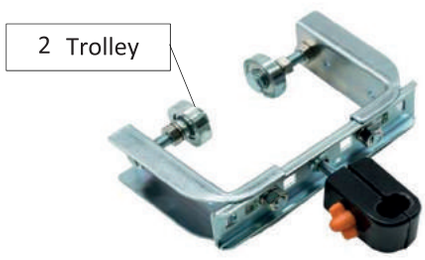

I-Beam Steel Trolley (Curve Line)		
Part Code	**Material**	**Application**
PWL-1-014	Steel	Beam 75-150mm
		Wire Ø 10mm

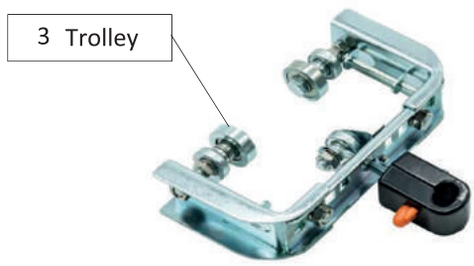

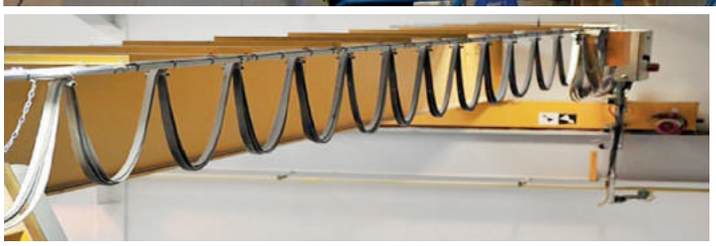

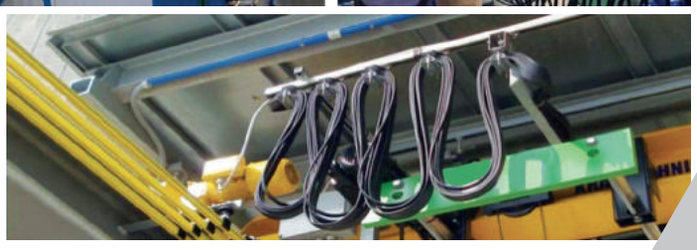

SECTION 2 : Cable Trolley for Flat Cable Application

Steel Trolley + Plastic Support		
Part Code	**Material**	**Application**
PWL-2-001	Steel+Plastic	C-Rail #30

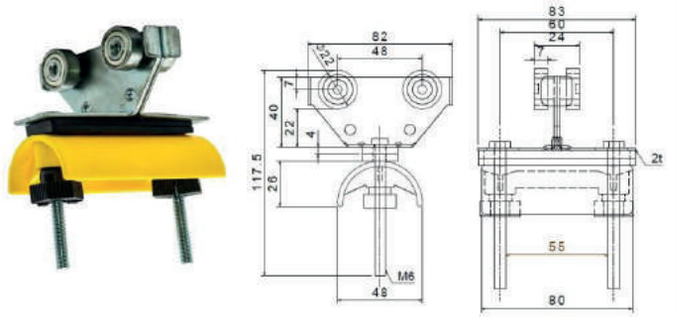

Plastic Trolley + Plastic Support		
Part Code	**Material**	**Application**
PWL-2-002	Plastic	C-Rail #30

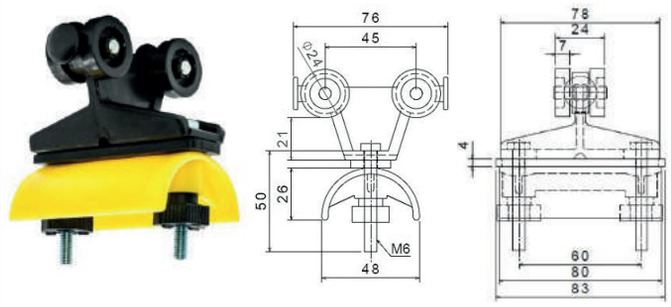

Steel Trolley # Size 28		
Part Code	**Material**	**Application**
PWL-2-003	Steel	C-Rail #28

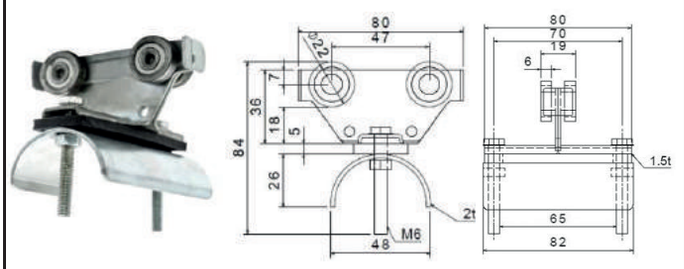

Steel Trolley # Size 30		
Part Code	**Material**	**Application**
PWL-2-004	Steel	C-Rail #30

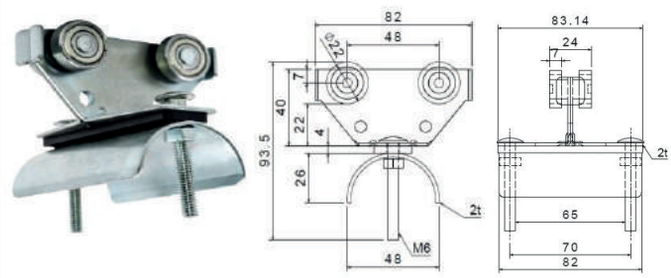

Steel Trolley # Size 40		
Part Code	**Material**	**Application**
PWL-2-005	Steel	C-Rail #40

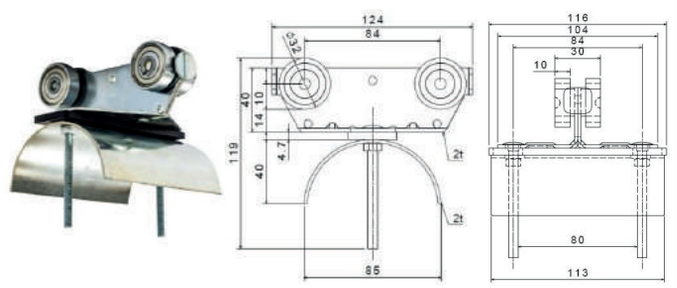

Stainless Trolley # Size 30		
Part Code	**Material**	**Application**
PWL-2-006	Stainless	C-Rail #30

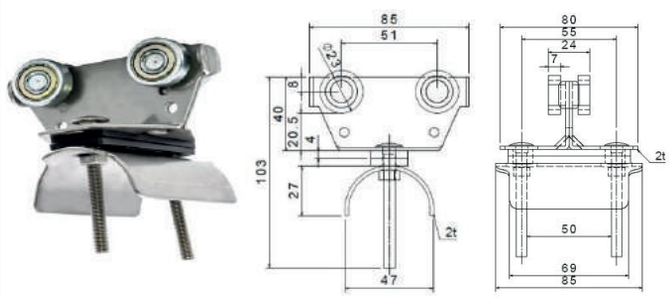

Stainless Trolley # Size 40		
Part Code	**Material**	**Application**
PWL-2-007	Stainless	C-Rail #40

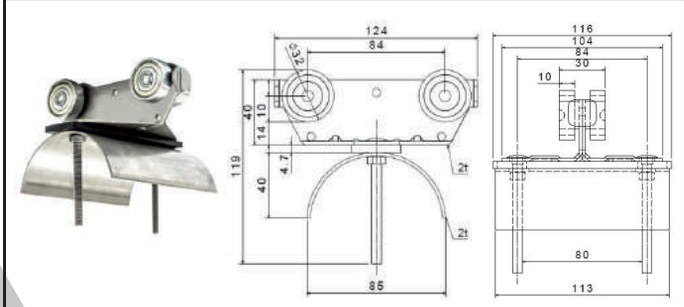

Steel Pipe Trolley		
Part Code	**Material**	**Application**
PWL-2-008	Steel	Pipe Ø 25mm

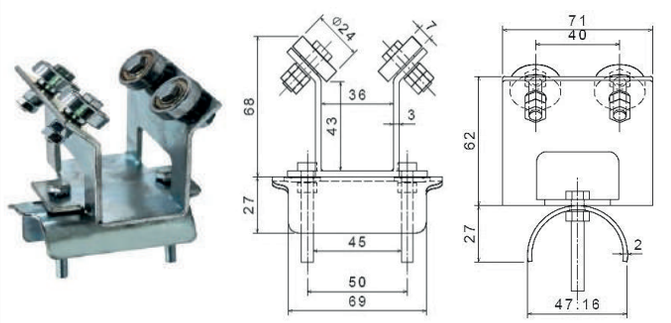

SECTION 3 : C-Rail Festoon System # Size 30mm

C-Rail 4M

Part Code	Material	Specification
PWL-3-001(4M)	Galv.Steel	Length 4 Metres
PWL-3-001(6M)	Galv.Steel	Length 6 Metres
PWL-3-018(3M)	Stainless Steel	Length 3 Metres

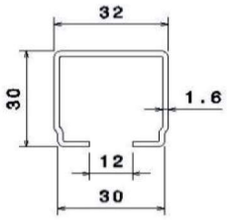

Track Support Bracket

Part Code	Material	Application
PWL-3-002	Galv.Steel	C-Rail #30
PWL-3-019	Stainless Steel	C-Rail #30

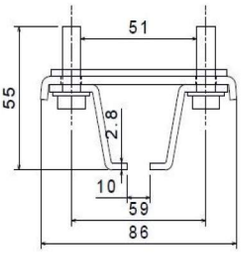

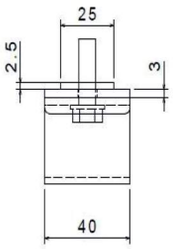

Track Coupler

Part Code	Material	Application
PWL-3-003	Galv.Steel	C-Rail #30
PWL-3-020	Stainless Steel	C-Rail #30

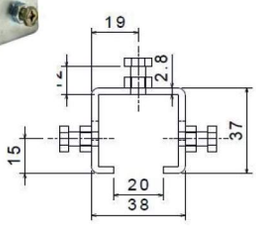

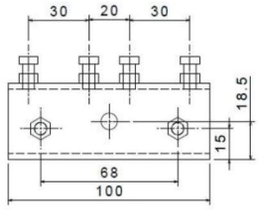

Towing Trolley

Part Code	Material	Application
PWL-3-004	Galv.Steel	C-Rail #30
PWL-3-021	Stainless Steel	C-Rail #30

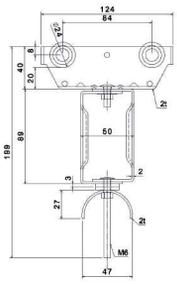
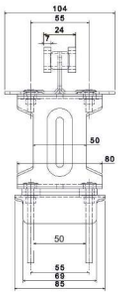

End Cable Clip

Part Code	Material	Application
PWL-3-005	Galv.Steel	C-Rail #30
PWL-3-022	Stainless Steel	C-Rail #30

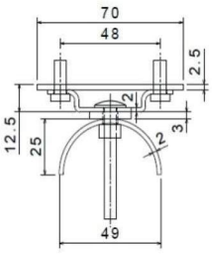

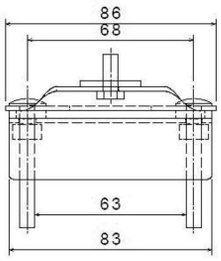

End Cap

Part Code	Material	Application
PWL-3-006	Plastic	C-Rail #30

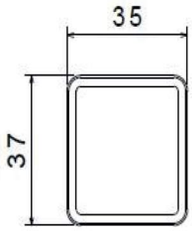

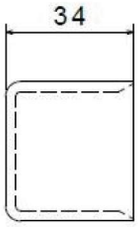

End Stopper

Part Code	Material	Application
PWL-3-007	Galv.Steel	C-Rail #30

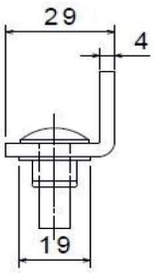

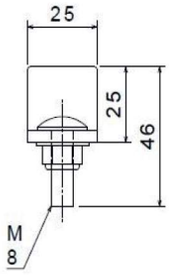

Cable Bracket

Part Code	Material	Application
PWL-3-008	Plastic	C-Rail #30

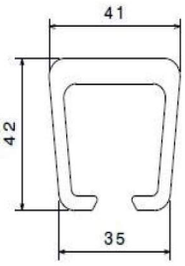

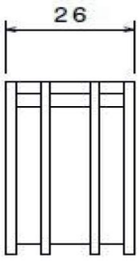

SECTION 3 : C-Rail Festoon System # Size 30mm

Cable Connecting Box		
Part Code	**Material**	**Application**
PWL-3-009	Steel+Plastic	C-Rail #30
PWL-3-023	Stainless+Plastic	C-Rail #30

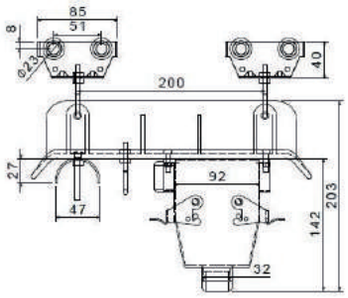

Cable Bracket		
Part Code	**Material**	**Application**
PWL-3-010	Galv.Steel	C-Rail #30

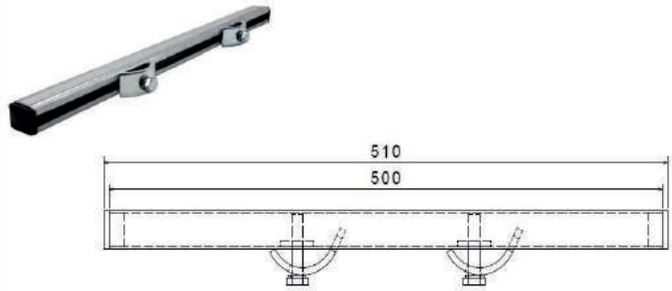

C-Track Clip		
Part Code	**Material**	**Application**
PWL-3-011	Galv.Steel	C-Rail #30

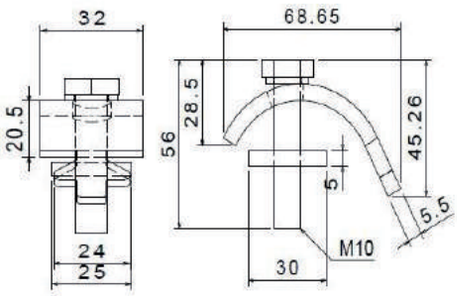

Support Arm		
Part Code	**Material**	**Application**
PWL-3-030	Galv.Steel	C-Rail #30

SECTION 3 : C-Rail Festoon System # Size 40mm

C-Rail 3M		
Part Code	**Material**	**Specification**
PWL-3-012(3M)	Galv.Steel	Length 3 Metres
PWL-3-024(3M)	Stainless Steel	Length 3 Metres

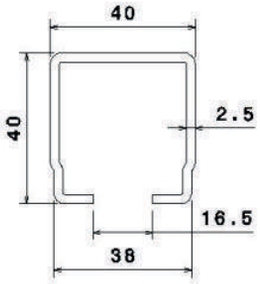

Track Support Bracket		
Part Code	**Material**	**Application**
PWL-3-013	Galv.Steel	C-Rail #40
PWL-3-025	Stainless Steel	C-Rail #40

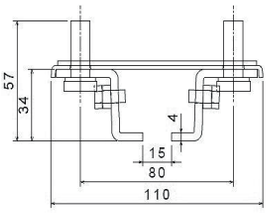

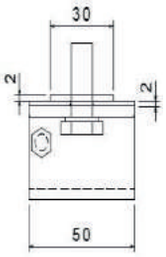

Track Coupler		
Part Code	**Material**	**Application**
PWL-3-014	Galv.Steel	C-Rail #40
PWL-3-026	Stainless Steel	C-Rail #40

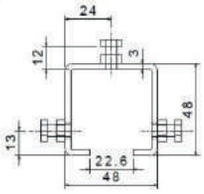

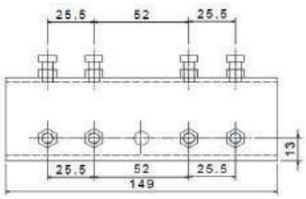

Towing Trolley		
Part Code	**Material**	**Application**
PWL-3-015	Galv.Steel	C-Rail #40
PWL-3-027	Stainless Steel	C-Rail #40

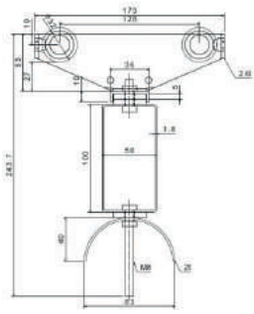

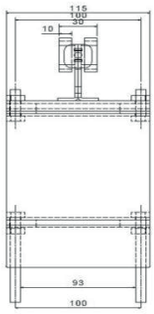

End Cable Clip		
Part Code	**Material**	**Application**
PWL-3-016	Galv.Steel	C-Rail #40
PWL-3-028	Stainless Steel	C-Rail #40

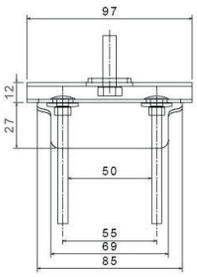

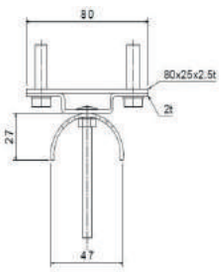

Cable Connecting Box		
Part Code	**Material**	**Application**
PWL-3-017	Steel+Plastic	C-Rail #40
PWL-3-029	Stainless+Plastic	C-Rail #40

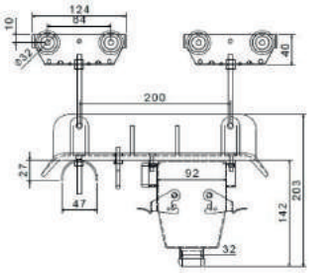

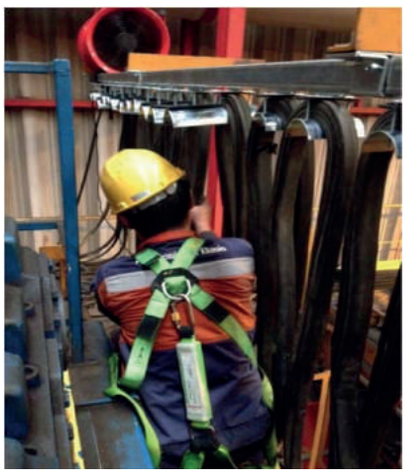

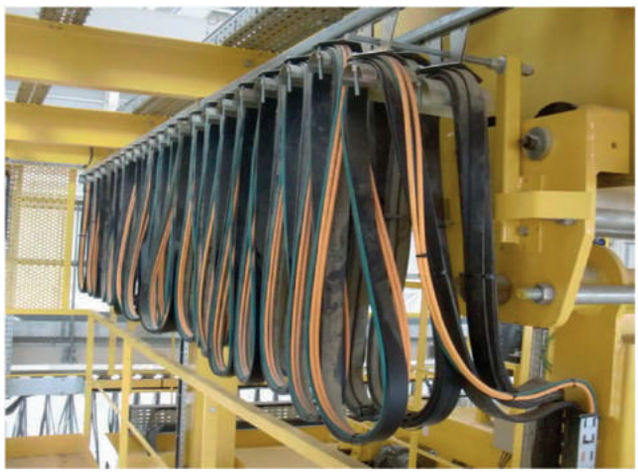

D. Installation

Cable Clip

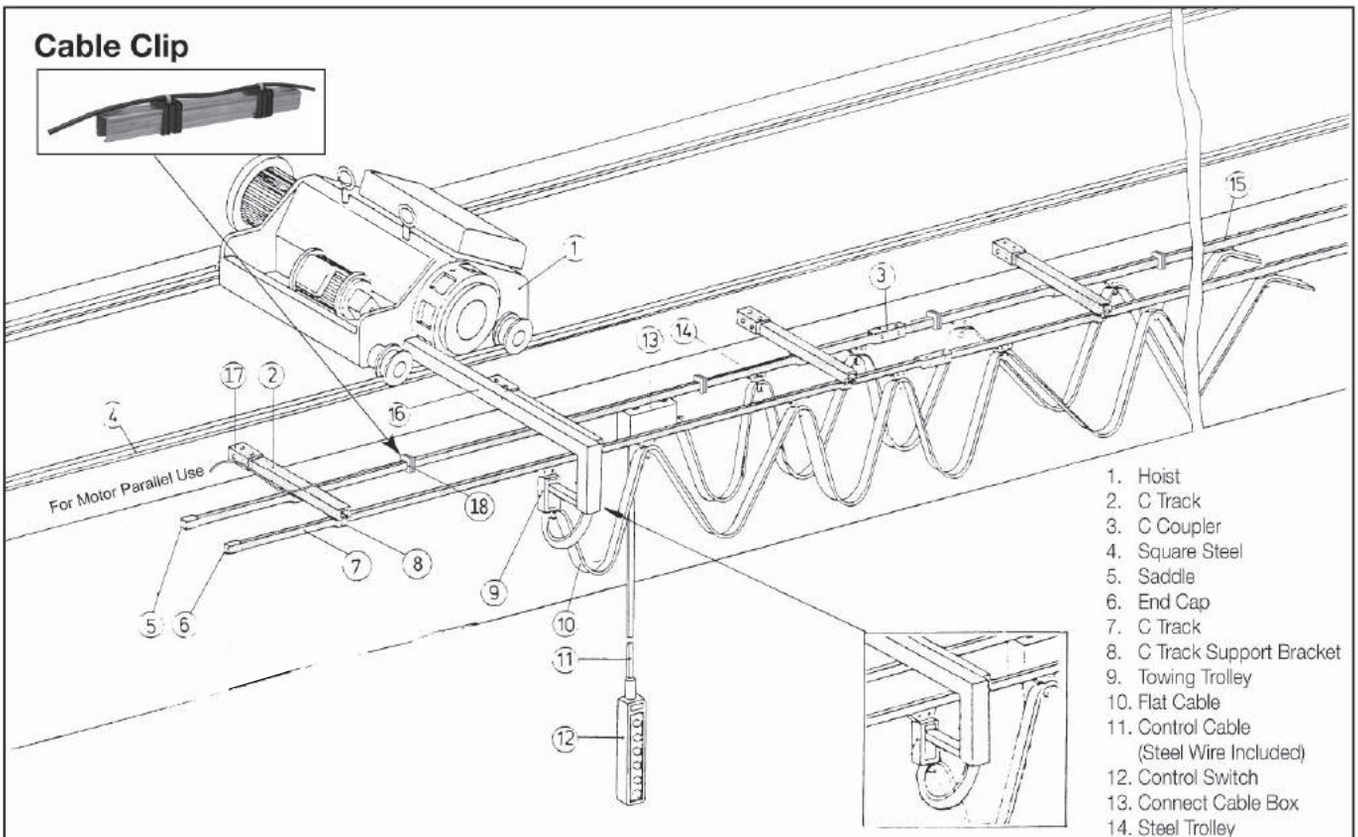

1. Hoist
2. C Track
3. C Coupler
4. Square Steel
5. Saddle
6. End Cap
7. C Track
8. C Track Support Bracket
9. Towing Trolley
10. Flat Cable
11. Control Cable (Steel Wire Included)
12. Control Switch
13. Connect Cable Box
14. Steel Trolley
15. End Cable Clip
16. Towing Stick
17. Connect Bracket
18. Motor Parallel (Cable Clip)

Dual Rail Hoist (C Track with Flat Cable Separate Control Chart)

Special Forte: Switch will avoid moving when hoist move.

Application: For long piece or big pail.

Mono Rail

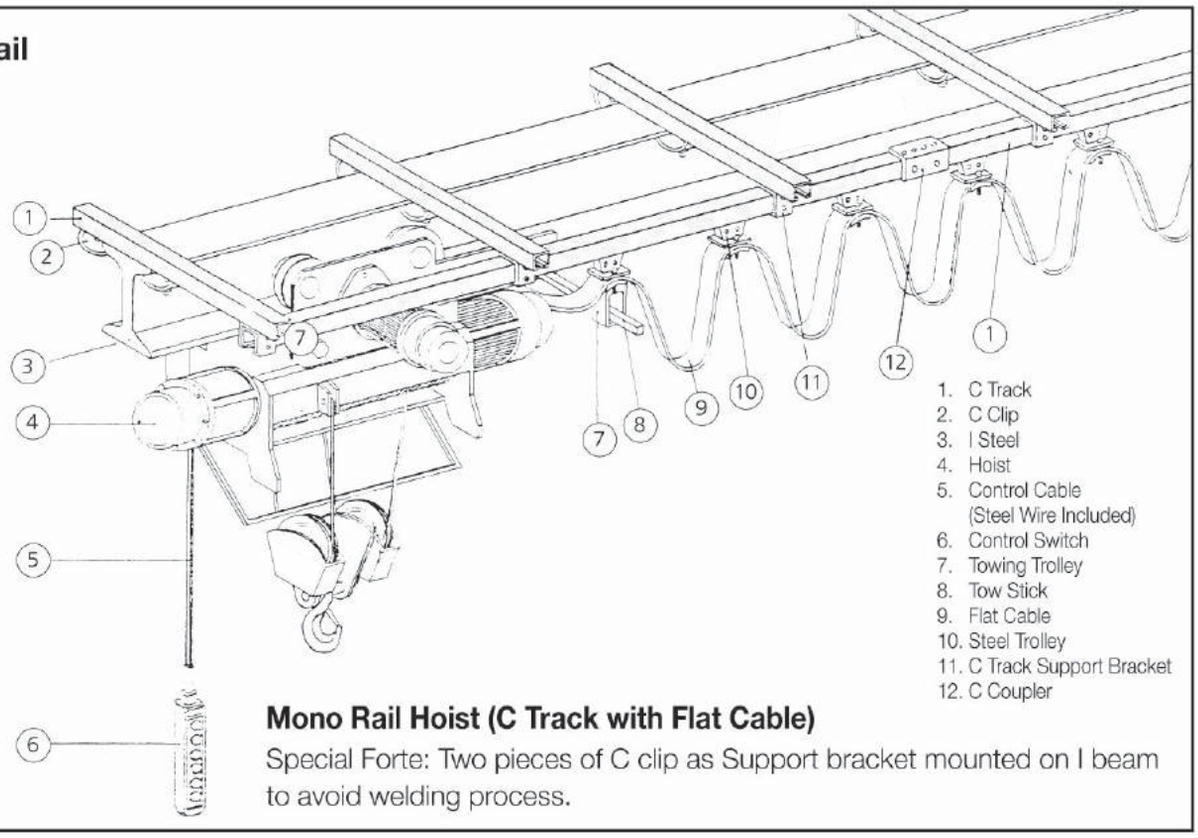

1. C Track
2. C Clip
3. I Steel
4. Hoist
5. Control Cable (Steel Wire Included)
6. Control Switch
7. Towing Trolley
8. Tow Stick
9. Flat Cable
10. Steel Trolley
11. C Track Support Bracket
12. C Coupler

Mono Rail Hoist (C Track with Flat Cable)

Special Forte: Two pieces of C clip as Support bracket mounted on I beam to avoid welding process.

POWERLINE : CABLE FESTOON SYSTEM

HIGH QUALITY PRODUCT FOR YOUR CONTROL

powerline